PRODUCT SHEET

LiteGait® LG150K

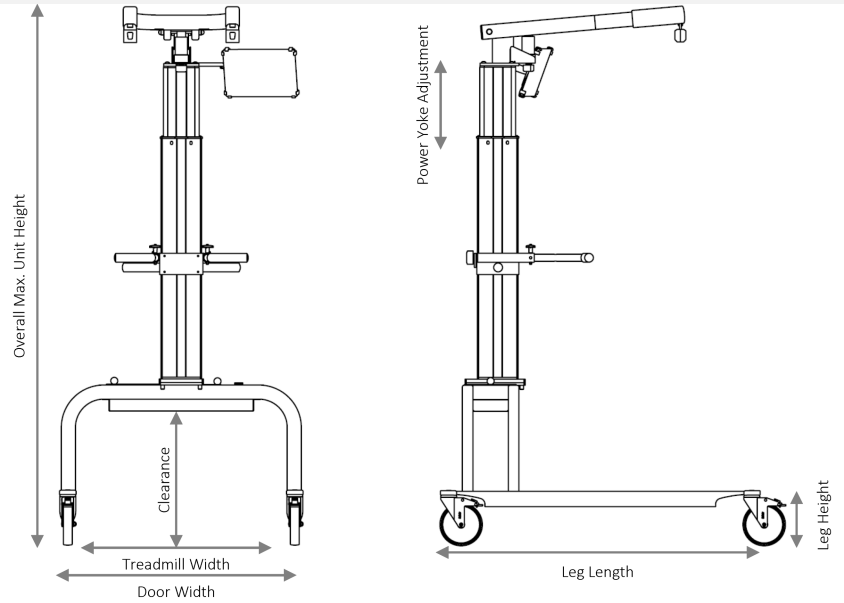

Max. Patient Weight	150 kg
Max. Patient Height Over Ground	
Over Ground	217
Max. Patient Height w/Treadmill	
Over Treadmill	202
Yoke Adjustment	
Powered	70
Manual	N/A
Overall Unit Height	242

Base Options	Standard Base	76	76/86	
Base Dimensions		76	86	
	Treadmill Width	74	84	
	Door Width	89	99	
	Max. Base Footprint	97 x 115		
	Clearance	48		
	Leg Length	115		
	Height (Floor to Top of Leg)	20		
	Caster Diameter	15.2		
Shipping Dimensions		107 x 71 x 140 cm		
Shipping Weight		120 kg	125 kg	

Power Requirements: 110V-240V 50/60Hz

LiteGait® Includes

Integrated Freedome	INCLUDED	Included Harness	1 Harness
BiSym	OPTIONAL	Standard Adult	
Gaiter Stool	OPTIONAL		
3D Handlebar	INCLUDED		
Parellel Grab Bar	OPTIONAL	Q-Straps	INCLUDED

Price

Customization Available - Contact Mobility Research Sales Dept. for additional information

Created: 12/12/2018

mobility research

All dimensions subject to change

Dimensions listed in cm/kg

Treadmill step up height: 16 cm